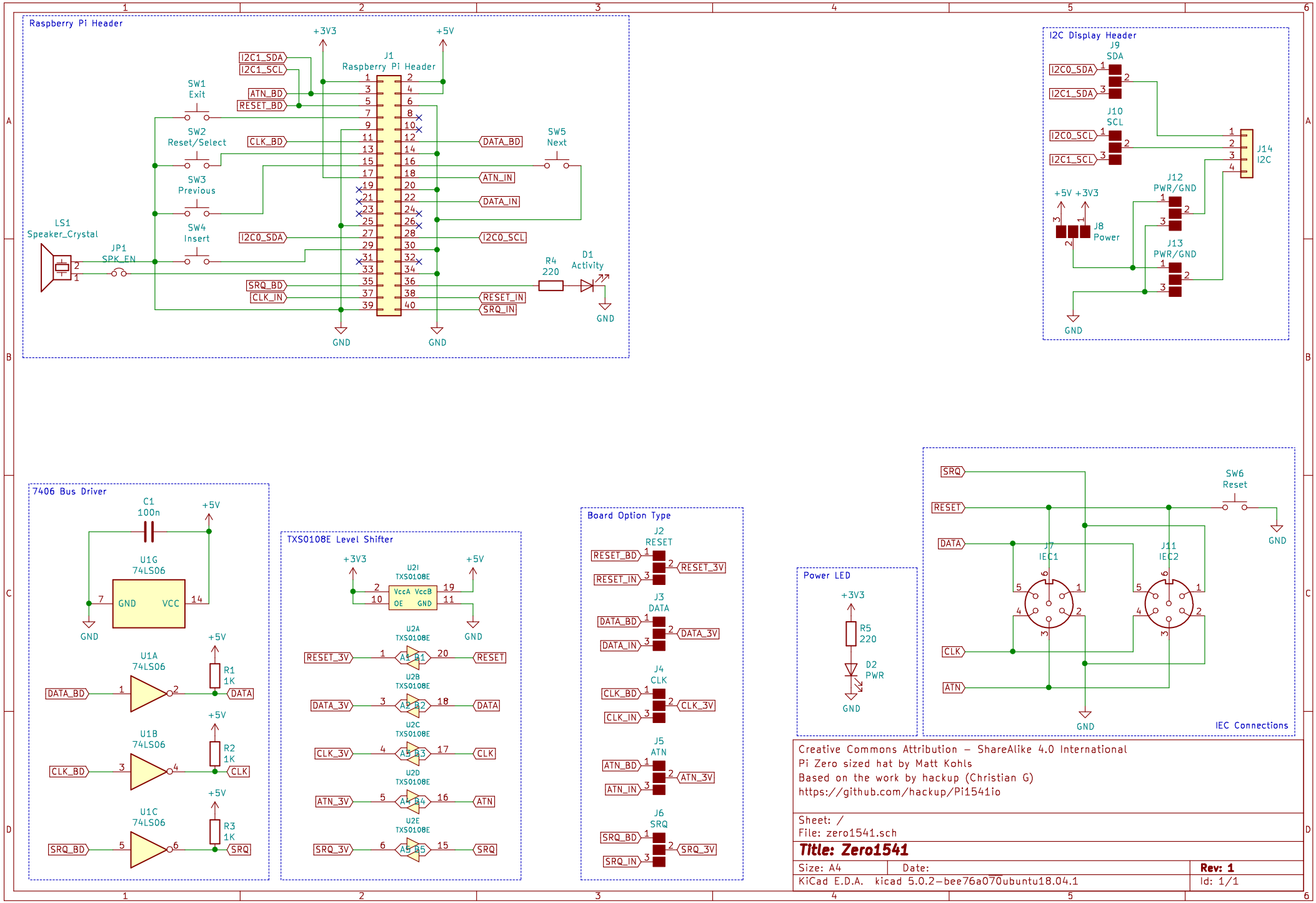
Raspberry Pi Header
J1
Raspberry Pi Header
+3V3
+5V
I2C1_SDA
I2C1_SCL
ATN_BD
RESET_BD
CLK_BD
I2C0_SDA
SRQ_BD
CLK_IN
DATA_BD
ATN_IN
DATA_IN
I2C0_SCL
RESET_IN
SRQ_IN
SW1
Exit
SW2
Reset/Select
SW3
Previous
SW4
Insert
SW5
Next
LS1
Speaker_Crystal
JP1
SPK_EN
R4
220
D1
Activity
GND
I2C Display Header
J9
SDA
J10
SCL
J14
I2C
J12
PWR/GND
J13
PWR/GND
J8
Power
7406 Bus Driver
C1
100n
U1G
74LS06
GND
VCC
U1A
74LS06
U1B
74LS06
U1C
74LS06
R1
1K
R2
1K
R3
1K
DATA
CLK
SRQ
TXS0108E Level Shifter
U2I
TXS0108E
U2A
TXS0108E
U2B
TXS0108E
U2C
TXS0108E
U2D
TXS0108E
U2E
TXS0108E
RESET_3V
DATA_3V
CLK_3V
ATN_3V
SRQ_3V
RESET
ATN
Board Option Type
J2
RESET
J3
DATA
J4
CLK
J5
ATN
J6
SRQ
RESET_3V
DATA_3V
CLK_3V
ATN_3V
SRQ_3V
Power LED
R5
220
D2
PWR
SW6
Reset
J7
IEC1
J11
IEC2
IEC Connections
Creative Commons Attribution – ShareAlike 4.0 International
Pi Zero sized hat by Matt Kohls
Based on the work by hackup (Christian G)
https://github.com/hackup/Pi1541io
Sheet: /
File: zero1541.sch
Title: Zero1541
Size: A4
Date:
Rev: 1
KiCad E.D.A. kicad 5.0.2-bee76a070ubuntu18.04.1
Id: 1/1